Description

The regulating valve is composed of an electric actuator or a pneumatic actuator and a regulating valve.Regulating valves are generally divided into two types: straight-through single-seat control valves and straight-through two-seat control valves. The latter has the characteristics of large circulation capacity, unbalanced operation and stable operation.Therefore, it is usually suitable for occasions with large flow, high pressure and low leakage.

Main Indicators

NO.	Project			Standard Control Valve		Elongated/hypothermia Control Valve	
				Without Locator	With Locator	Without Locator	With Locator
1	Basic Error<(%)			±8	±1.5	±15	±4
2	Backlash<(%)			—	1.5	—	3
3	Dead Zone<(%)			6	0.6	8	1
4	Start-End Deviation <(%)	Open	Start	±4.0	±2.5	±6	±2.5
5		Gas	End	—	±2.5	—	±2.5
6		Close	Start	—	±2.5	—	±2.5
7		Gas	End	±4.0	±2.5	±6	±2.5
8	Rated Stroke Deviation			4	±2.5	6	2.5
9	Rated Kt			Table 1			
10	Flow Characteristics			Chart 1			
11	Adjustable Ratio R			50:1			
12	Seat Leakage			Table 2			

Main Indicators

Type	Unbalanced Spool Ttype
Nominal Passage	DN20mm~200mm(3/4"~8")
Flow	Equal Percentage/Linear
Nominal Pressure	PN:PN1.6MPa/2.5MPa/4.0MPa/6.3MPa/10.0MPa
	Class：Class150/Class300/Class600
Connection Method	Flange Connection/Welding/Threaded Connection①
Flange Distance	GB/T12221-2005①
Material of Body And Cap	WCB/WC9/CF8/CF8M
	Operating temperature & pressure range (Appendix 1)
Cap Type	Standard：-29℃~+200℃ （Chart 2）
	Elongated：-60℃~-29℃ more than200℃(Chart 3）
	Low Temperature：-196℃~-60℃(Chart 5)
	Bellows Seal(Chart 4)
	Jacket Insulation(Chart 6)
Packing	V-type PTFE/Carbon Fiber PTFE/ Asbestos PTFE/Flexible Graphite PTFE
Surface Coating	Silver Gray(Epoxy Resin) The body is uncoated if it is stainless steel.

Note 1: The connection method, valve body flange and flange face distance can be customized;
Note 2:Body, valve and trim materials can be customized.



Flow Characteristics

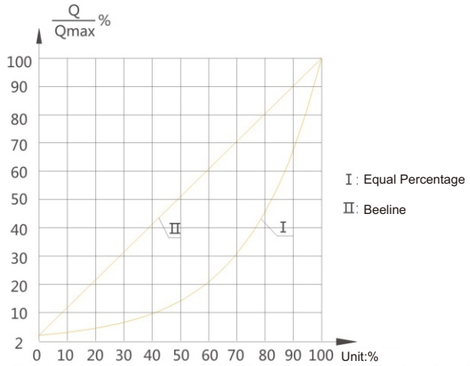

Q/Qmax / I/L characteristic	0	10	20	30	40	50	60	70	80	90	100
Beeline	2	11.8	21.6	31.4	41.2	51	60.8	70.6	80.4	90.2	100
Equal Percentage	2	3	4.37	6.5	9.6	14.1	20.9	30.9	45.7	67.6	100

FLOWX®
WORLD-CLASS VALVE SUPPLIER
Pneumatic Control Valve

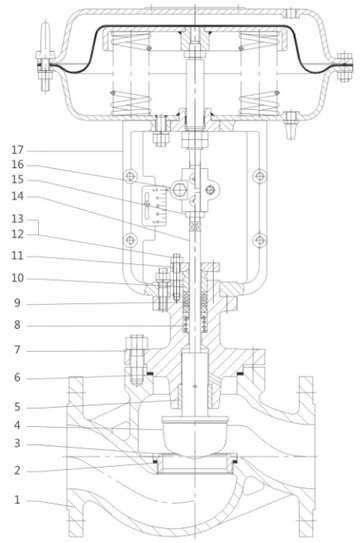

Chart 2：Standard type

Trim Type

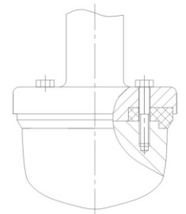

RTFE Actuator

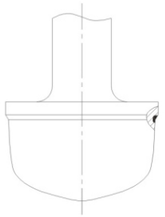

Face cover surfacing titanium Alloy Trim

1	Body
2	Gasket
3	Seat
4	Trim
5	Sleeve
6	Seal Ring
7	Bonnet
8	Packing Spring
9	Packing Material
10	Packing Stud
11	Packing Restrainer
12	Tighten Screw
13	Tighten Gland
14	Stem
15	Lock Nut
16	Clip Indicator
17	Actuator

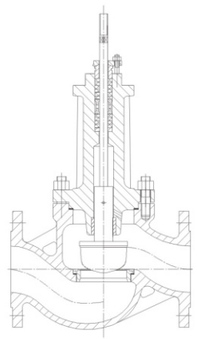

Chart 3：Elongated Bonnet
Elongated：-60℃~-29℃ and more than200℃

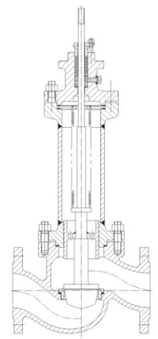

Chart 4:Bellows Seal
The valve stem is completely sealed to prevent leakage of fluid.It is especially suitable for automatic.Also suitable for high vacuum control environments. control of highly corrosive, toxic or precious rare media.

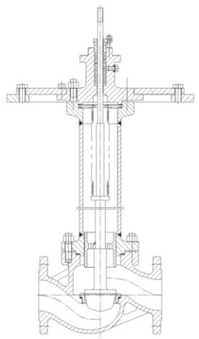

Chart 5:Low Temperature
It is suitable for installation in a cold box for the control of low temperature media.

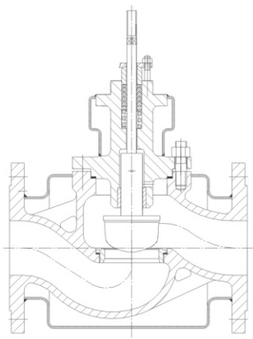

Chart 6:Jacket Insulation
It is suitable for clogging caused by easy crystallization of fluids and where precise control of fluid temperature is required.

Packing Material
Operating temperature&Range

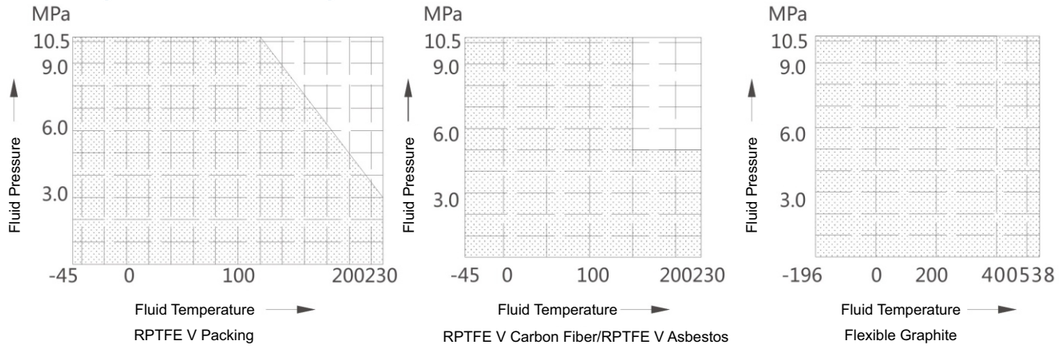

Rated Kt Rated Stroke(Table 1)

Nominal Passage DN(mm)	Trim Size DG(mm)	Rated Kt		Stroke (mm)
		Equal Percentage	Beeline	
20	20	6.3	6.9	16
25	20	6.3	6.9	16
	25	10	11	16
32	20	6.3	6.9	16
	25	10	11	16
	32	16	17.6	25
40	25	10	11	16
	32	16	17.6	25
	40	25	27.5	25
50	32	16	17.6	25
	40	25	27.5	25
	50	40	44	25
65	40	25	27.5	25
	50	40	44	25
	65	63	69	40
80	50	40	44	25
	65	63	69	40
	80	100	110	40
100	65	63	69	40
	80	100	110	40
	100	160	176	40
125	80	100	110	40
	100	160	176	40
	125	250	275	60
150	100	160	176	40
	125	250	275	60
	150	400	440	60
200	125	250	275	60
	150	400	440	60
	200	630	690	60

Material&Temperature&Allowable Leakage(Table 2)

Body Material：Carbon steel

Body Material		WCB/WCC/WC6/WC9/LCB			
Trim	Material	304/316	304/316	304/316	304/316
	Process	RTFE		ST	SS
Seat	Material	304/316	304/316	304/316	304/316
	Process			ST	SS
Allowable leakage	level	V/VI	IV	IV/V/VI	IV/V/VI
	Standard	GB/T4213/FC170.2			
Operating Temperature (℃)	WCB/WCC	-5~+200	-5~+230	-5~+425	-5~+425
	WC6/WC9	-5~+200	-5~+230	-5~+538	-5~+538
	LCB	-45~+200	-45~+230	-45~+350	-45~+350

Body Material：stainless steel

Body Material		CF3/CF8/CF3M/CF8M			
Trim	Material	304/316	304/316	304/316	304/316
	Process	RTFE		ST	SS
Seat	Material	304/316	304/316	304/316	304/316
	Process			ST	SS
Allowable leakage	level	V/VI	IV	IV/V/VI	IV/V/VI
	Standard	GB/T4213/FC170.2			
Operating Temperature(℃)		-45~+200	-196~+538	-196~+538	-196~+538

①Please specify when the seat temperature reaches V.

②If the medium happen to evaporate instantaneously,the reduced bore and trim&seat surface is welded by Stellite.

FLOWX®
WORLD-CLASS VALVE SUPPLIER
Pneumatic Control Valve

Link Type and standard

Connection Method	Flange (standard)
	Welding/Threaded Connection(User specified)
Flange standard	PN1.6MPa(Steel flange according to GB/T9113)
	PN4.0MPa/6.3MPa/10.0MPa(Steel flange according to GB/T9113)
Sealing surface	PN1.6MPa(RF)
	PN4.0MPa/6.3MPa/10.0mPA(MF),Body(F)
Flange End Aperture	GB/T12221-2005
Membrane actuator mechanism air source interface	Rc1/4"

Note:Connection Method/Body Flange standard/Sealing surface/Flange End Aperture(Standard manufacturing by the user)

Dimensions

StandardDN20~50/ Heat Sink TypeBellows Seal Type

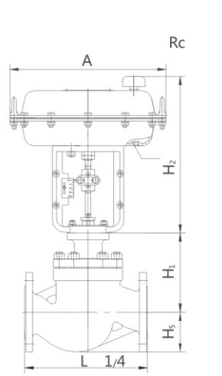

Standard

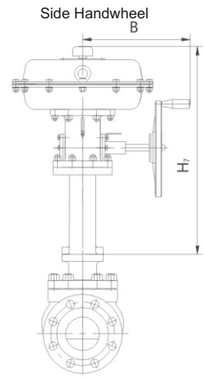

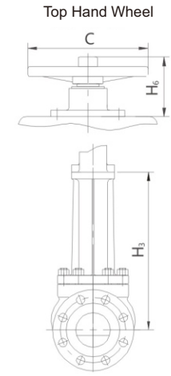

Heat Sink Type

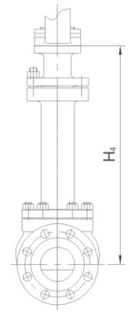

Bellows Seal Type

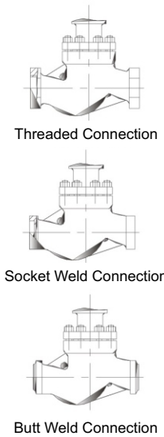

Threaded Connection

Socket Weld Connection

Butt Weld Connection

*The size of these three connection methods needs to be asked.

Nominal Passage DN(mm)	L		Executive Agency									
	PN16 150# PN25 PN40	PN64 PN100 300# 600#	H1	H3	H4	H5	A	C	H2	H6	H7	B
20	150	230	140	255	338	48	282	220	258	180	305	260
25	160	230	140	255	338	54	282	220	258	180	305	260
32	180	260	160	320	405	60	282	220	258	180	305	260
							308	220	280	180	305	260
40	200	260	160	320	405	68	282	220	258	180	305	260
							308	220	280	180	305	260
50	230	300	180	320	405	80	308	220	280	180	305	260

StandardDN20~50/ Heat Sink TypeBellows Seal Type

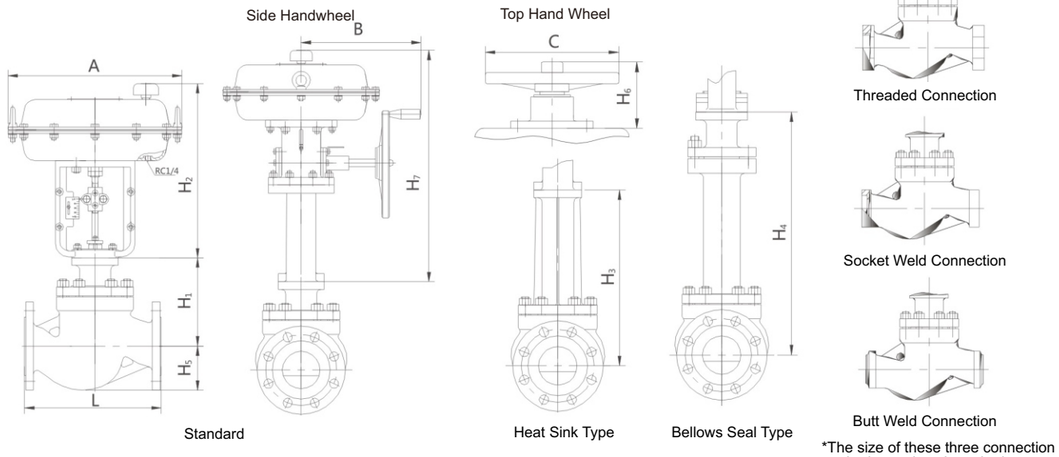

*The size of these three connection methods needs to be asked.

Nominal Passage DN(mm)	L		H1	H3	H4	H5	Executive Agency					
	PN16 PN25 PN40	PN64 PN100 300# 600#					A	C	H2	H6	H7	B
65	290	340	210	365	630	90	308	220	280	180	305	260
							394	270	360	236	580	305
80	310	380	210	365	630	105	308	220	280	180	305	260
							394	270	360	236	580	305
100	350	430	220	375	635	115	394	270	360	236	580	305
125	400	500	290	485	698	130	394	270	360	236	580	305
							498	320	435	310	675	330
150	480	550	340	530	705	155	394	270	360	236	580	305
							498	320	435	310	675	330
200	600	650	370	555	730	195	498	320	435	310	675	330

Body Jacket Insulation Standard /Heat Sink TypeBellows Seal Type

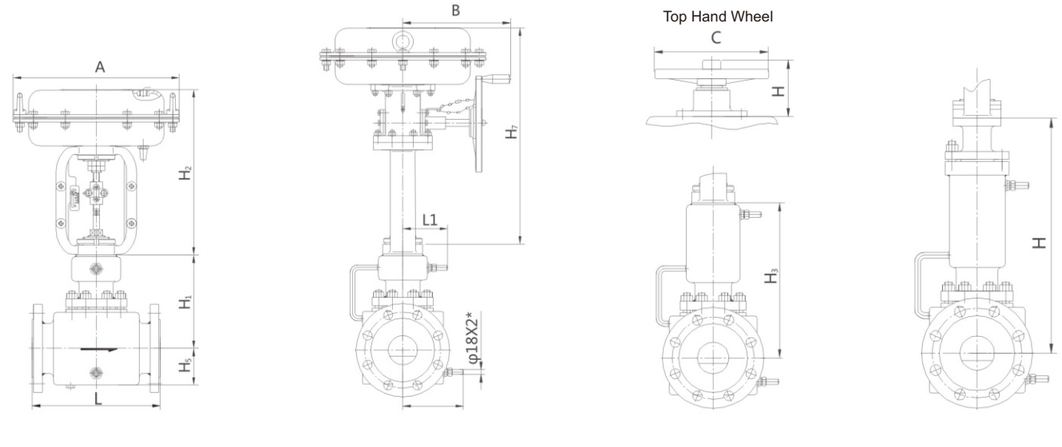

Nominal Passage DN(mm)	Specification	L	L1	L2	H1	H3	H4	H5	Executive Agency					
									A	C	H2	H6	H7	B
20	40	230	101	126	152	255	338	75	282	220	258	180	305	260
25	40	230	101	126	152	255	338	81	282	220	258	180	305	260
32	50	260	108	126	177	320	405	89	282	220	258	180	305	260
									308	220	280	180	305	260
40	65	260	108	130	177	320	405	95	282	220	258	180	305	260
									308	220	280	180	305	260
50	80	300	108	141	183	320	405	110	308	220	280	180	305	260
65	100	340	123	156	221	365	630	121	308	220	280	180	305	260
									394	270	360	236	580	305
80	125	380	123	170	221	365	630	133	308	220	280	180	305	260
									394	270	360	236	580	305
100	150	430	123	180	230	375	635	146	394	270	360	236	580	305
125	200	500	140	200	315	485	698	160	394	270	360	236	580	305
									498	320	435	310	675	330
150	250	550	140	220	355	530	705	180	394	270	360	236	580	305
									498	320	435	310	675	330
200	300	650	140	265	385	555	730	210	498	320	435	310	675	330