*FPH77、6X型 对夹式双瓣止回阀 TYPE BUTT-CLAMPED TYPE DOUBLE PETAL CHBCK VALVE

■结构特点及用途 Structures charcteristics and usahe

该阀采用对夹式安装，主要用于管路中或水泵出口处，用于水泵停机时防止管路中介质倒流，压差水锤冲击水泵倒转的安全装置。本阀具有体积小、重量轻、便于安装维修，有导向装置，关闭灵活、快速，防止巨大介质倒流压差，形成消声效果。

适用于给排水、消防、暖通等管路或泵出口，以防止介质倒流水锤冲击对管路与泵的损害。

This valve uses butt-installation and is used in the pipeline or at the pump outlet to, as a safety device, prevent the pump from inversed running due to the differential water hammer's shock caused by the medium's back-flow in the pipeline when the pump stops, and features small volume, light weight, easy installation and maintenance, set with a guide device, flexible and quick close, preventing huge medium's back-flow differential and forming silencing effect.

Suitable for the pipeline of water supply and drainage, fire-fighting, warming etc. Or the pump outlet to prevent both pump and pipeline from being damaged due to the medium's back-flow water hammer's shock.

■主要技术参数 Main technique number

型号 Type	公称 Nominal PN(MPa)	强度试验压力 Test stre-ngth pressure (MPa)	密封试验压力 Test seal Pressure (MPa)	适用温度 Applicable temperature (℃)	适用温度 Applicable Media
H76X-10 H77X-10	1.0	1.5	1.1	≤80	清水 Clean-water 污水 Slops 海水 Sea
H76X-16 H77X-16	1.6	2.4	1.76		

■主要零件材料 Material for main parts

零件名称 Name of part	阀体 Body	阀瓣 Disc	阀杆 Stem	弹簧 Spring	阀座 Seat
材质 Material	铸铁CI、碳钢Bowl-shaped steel、不锈钢 Stainless steel	铸铁CI、碳钢Bowl-shaped steel、不锈钢 Stainless steel	不锈钢 Stainless steel	不锈钢 Stainless steel	丁腈橡胶NBR 不锈钢Stainless steel

■主要外形尺寸 Main extermal dimensions

公称通径 Nominal diameter DN(mm)	L	H	D	
			1.0MPa	1.6MPa
50	43	60	105	105
65	46	73	124	124
80	64	89	142	142
100	64	110	162	162
125	70	141	192	192
150	76	168	218	218
200	89	219	272	273
250	114	273	328	328
300	114	324	378	384
350	127	356	438	444
400	140	418	489	495
450	152	457	540	555
500	152	526	594	616
600	178	626	695	734
700	229	672	810	804
800	241	778	916	910
900	241	878	1016	1010
1000	300	914	1124	1128



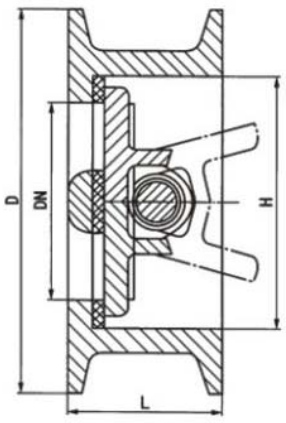

* FPSFCV、HC44X型 橡胶瓣止回阀 TYPE FLEX CLOCK CHECK VALVE

■结构特点及用途 Structures charcteristics and usahe

本阀阀瓣外层披覆橡胶制成，阀瓣开关寿命可达100万次，采用全流面积式设计，具有水头损失小，不易堆积杂物，维修简单等特点。

适用于给排水管路系统，安装于管路中或水泵出口处，以防止介质倒流及水锤对管路与泵的损害，本阀还可安装在蓄水池进出口水的旁通管上，以辅助池水倒流至给水系统中。

The flap of this valve is coated with rubber on its outer layer and the switching duration it can be up to 1 million times. And, with the full-flow area design, features small head loss, not easy piled-up of foreign matters and simple repair.

Suitable for the water supply and drainage system to, mounted in the pipeline or on the pump outlet, prevent both pump and pipeline from being damaged due to medium's back-flow and water hammer. It can also be mounted on the by-pass pipe for water in and out of a reservoir to assist the water of the reservoir to flow back to the water supply system.

■主要技术参数 Main technique number

公称压力PN(mpa) Nominal pressure		1.0	1.6	2.5
试验压力 Test pressure (Mpa)	壳体强度 Shell strength	1.5	2.4	2.8
	密封性能 Sealing performance	1.1	1.76	3.8
工作温度(℃) Working temperature		≤80		
适用介质 Applicable medium		清水Rinsing、油品Dead oil		

■主要零件材料 Material far main parte

零件名称 Name of parts	材 质 Material
阀体 Body、阀盖 Valve casing	灰铸铁Casting pig、球墨铸铁Ductile Iron 铸钢No25A
阀 瓣 Seat	橡胶组合件RUBBER ASSEMBLY
弹 簧 Spring	不锈钢Stainless Steel

■结构简图 structures drawing



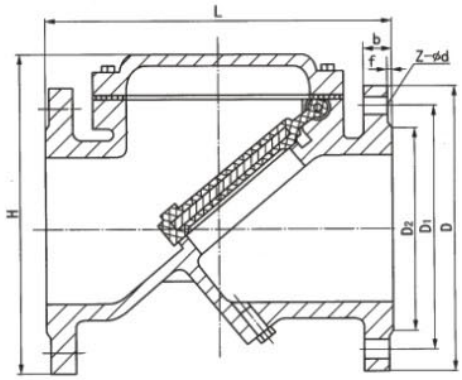

■主要外形及连接尺寸 Main external and connecting dimensions

公称通径 Nominal diameter DN(mm)	PN10							PN16							PN25							
	L	b	f	D2	D	D1	z-Φd	L	b	f	D2	D	D1	z-Φd	L	b	f	D2	D	D1	z-Φd	H
40	165	18	2	85	150	110	4-18	165	18	2	85	150	110	4-18	165	18	2	85	150	110	4-18	180
50	200	20	3	102	165	125	4-18	200	20	3	102	165	125	4-18	200	20	3	99	165	125	4-18	190
65	215	20	3	122	185	145	4-18	215	20	3	122	185	145	4-18	215	22	3	118	185	145	8-18	210
80	240	22	3	133	200	160	8-18	240	22	3	133	200	160	8-18	240	24	3	132	200	160	8-18	230
100	290	24	3	158	220	180	8-18	290	24	3	158	220	180	8-18	290	24	3	156	235	190	8-22	250
125	330	26	3	184	250	210	8-15	330	26	3	184	250	210	8-18	330	26	3	184	270	220	8-26	280
150	355	26	3	212	285	240	8-22	355	26	3	212	285	240	8-22	355	28	3	211	300	250	8-26	315
200	500	28	3	268	340	295	8-22	500	30	3	268	340	295	12-22	500	30	3	274	360	310	12-26	370
250	620	28	3	320	395	350	12-22	620	32	3	320	405	355	12-26	620	32	3	330	425	370	12-30	430
300	700	28	4	370	445	400	12-22	700	32	4	370	460	410	12-26	700	34	4	389	485	430	16-30	475
350	785	30	4	428	500	460	16-22	785	36	4	428	520	470	16-26	785	38	4	450	555	490	16-33	550
400	915	32	4	482	565	515	16-26	915	38	4	482	580	525	16-30	915	40	4	505	620	550	16-36	600

* FP H41 H/W/N -PN25、40、64、100升降式、立式止回阀LIFT AND VERTICAL LIFT CHECK VALVES
H42





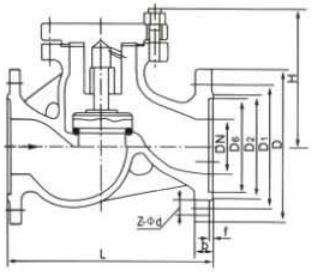

H41H H41W H41N

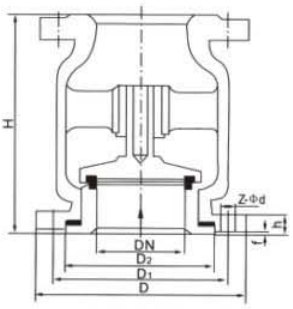

H42H H42W H42N

■主要连接及外形尺寸
Main connection and external dimensions (mm)

PN	DN	L	H	D	D1	D2	D6	b	f	f1	z-Φd
H41 H/W/N -25 C/P/R	15	130	100	95	65	45	–	16	2	–	4-Φ14
	20	150	105	105	75	55	–	16	2	–	4-Φ14
	25	160	120	115	85	65	–	16	2	–	4-Φ14
	32	180	130	135	100	78	–	18	2	–	4-Φ18
	40	200	135	145	110	85	–	18	3	–	4-Φ18
	50	230	149	160	125	100	–	20	3	–	4-Φ18
	80	310	169	195	160	135	–	22	3	–	8-Φ18
	100	350	194	230	190	160	–	24	3	–	8-Φ23
	150	480	255	300	250	218	–	30	3	–	8-Φ25
	200	600	305	360	310	278	–	34	3	–	12-Φ25
H41 H/W/N -40 C/P/R	15	130	100	95	65	45	40	16	2	4	4-Φ14
	20	150	105	105	75	55	51	16	2	4	4-Φ14
	25	160	120	115	85	65	58	16	2	4	4-Φ14
	32	180	130	135	100	78	66	18	2	4	4-Φ18
	40	200	135	145	110	85	76	18	3	4	4-Φ18
	50	230	149	160	125	100	88	20	3	4	4-Φ18
	80	310	169	195	160	135	121	22	3	4	8-Φ18
	100	350	194	230	190	160	150	24	3	4.5	8-Φ23
	150	480	255	300	250	218	204	30	3	4.5	8-Φ25
	200	600	305	375	320	282	260	38	3	4.5	12-Φ30
H41 H/W/N -64 C/P/R	15	130	100	105	75	55	40	18	2	4	4-Φ14
	20	150	110	125	90	68	51	20	2	4	4-Φ18
	25	160	125	135	100	78	58	22	2	4	4-Φ18
	32	180	140	150	110	82	66	24	2	4	4-Φ23
	40	200	168	165	125	95	76	24	3	4	4-Φ23
	50	230	170	175	135	105	88	26	3	4	4-Φ23
	80	310	205	210	170	140	121	30	3	4	8-Φ23
	100	350	230	250	200	168	150	32	3	4.5	8-Φ25
	150	480	265	340	280	240	204	38	3	4.5	8-Φ34
	200	600	310	405	345	300	260	44	3	4.5	12-Φ34

■性能规范
Specifications

公称压力PN Nominal pressure	2.5	4.0	6.4	10.0	MPa
壳体试验压力PT Shell test	3.75	6.0	9.6	15.0	
高压密封试验压力 High pressure sealing test	2.75	4.0	7.04	11.0	
低压密封试验压力 Low pressure sealing test	0.6				
适用介质 Applicable medium	C	P	R	N	
	水、油品、蒸汽 Water,Oil,Steam	硝酸类 Nitric Acid	醋酸类 Acetic Acid	液化气 LPG	
适用温度 Applicable temperature	≤425℃	≤100℃		-40~+80℃	

1、设计与制造DesignManafacfure According：GB/T 12235-89

2、结构长度Face to face： GB/T 12221-89

3、法兰标准Flange standard： JB/T 79-94

4、阀门检查和试验Valve check and test according：GB/T 13927-92

■主要连接及外形尺寸
Main connection and external dimensions (mm)

PN	DN	H	D	D1	D2	b	f	z-Φd
H42 H/W/N -25 C/P/R	32	120	135	100	78	18	2	4-Φ18
	40	130	145	110	85	18	3	4-Φ18
	50	140	160	125	100	20	3	4-Φ18
	65	160	180	145	120	22	3	8-Φ18
	80	185	195	160	135	22	3	8-Φ18
	100	210	230	190	160	24	3	8-Φ23
	125	250	270	220	188	28	3	8-Φ25
	150	300	300	250	218	30	3	8-Φ25
	200	380	360	310	278	34	3	12-Φ25

* FPH44W-PN25、40、64、100 旋启式止回阀 LOW TEMPERATURE SWING CHECK VALVE



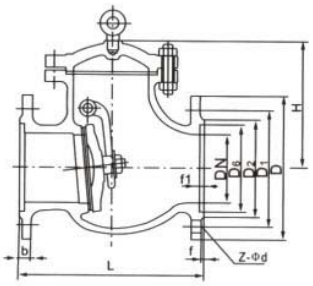

主要性能规范 Chief propetry and specification

试验压力(MPa) Test pressure	公称压力PN Nominal pressure			
	2.5	2.5	6.4	10
壳体试验压力PT Shell test	3.75	6.0	9.6	15
密封试验(液) Seal test(Liquid)	2.75	4.4	7.0	11
密封试验(气) Seal test(gas)	0.6			
适用介质 Applicable medium	C		P	R
	水、油品、蒸汽 Water,Oil,Steam		硝酸类 Nitric Acid	醋酸类 Acetic Acid
适用温度 Applicable temperature	≤425℃		≤200℃	≤200℃

1、设计与制造DesignManafacfure According：GB/T 12235-89

3、法兰标准Flange standard： JB/T 79-94

4、阀门压力试验：GB/T 13927-92

主要连接及外形尺寸 Main connection and external dimensions

(mm)

公称压力PN(MPa) Nominal pressure	公称通径DN(mm) Nominal diameter	L	H	D	D_1	D_2	D_6	b	f	f_2	z-Φd
H44H/W/Y-25C/P/R	50	230	160	160	125	100	–	20	3	–	4-Φ18
	65	290	175	180	145	120	–	22	3	–	8-Φ18
	80	310	185	195	160	135	–	22	3	–	8-Φ18
	100	350	220	230	190	160	–	24	3	–	8-Φ23
	125	400	248	270	220	188	–	28	3	–	8-Φ25
	150	480	276	300	250	218	–	30	3	–	8-Φ25
	200	550	350	360	310	278	–	34	3	–	12-Φ25
	250	650	410	425	370	332	–	36	3	–	12-Φ30
	300	750	430	485	430	390	–	40	4	–	16-Φ30
	350	850	518	550	490	448	–	44	4	–	16-Φ34
	400	950	560	610	550	505	–	48	4	–	16-Φ34
	500	1150	618	730	660	610	–	52	4	–	20-Φ41
H44H/W/Y-40C/P/R	50	230	169	160	125	100	88	20	3	4	4-Φ18
	65	290	173	180	145	120	110	22	3	4	8-Φ18
	80	310	185	195	160	135	121	22	3	4	8-Φ18
	100	350	220	230	190	160	150	24	3	4.5	8-Φ23
	125	400	248	270	220	188	176	28	3	4.5	8-Φ25
	150	480	270	300	250	218	204	30	3	4.5	8-Φ25
	200	550	342	375	320	282	260	38	3	4.5	12-Φ30
	250	650	401	445	385	345	313	42	3	4.5	12-Φ34
	300	750	423	510	450	408	364	46	4	4.5	16-Φ34
	350	850	455	570	510	465	422	52	4	5	16-Φ34
	400	950	510	655	585	535	474	58	4	5	16-Φ41
H44H/W/Y-64C/P/R	50	300	177	175	135	105	88	26	3	4	4-Φ23
	65	340	197	200	160	130	110	28	3	4	8-Φ23
	80	380	212	210	170	140	121	30	3	4	8-Φ23
	100	430	248	250	200	168	150	32	3	4.5	8-Φ25
	125	500	296	295	240	202	176	36	3	4.5	8-Φ30
	150	550	330	340	280	240	204	38	3	4.5	8-Φ34
	200	650	385	405	345	300	260	44	3	4.5	12-Φ34
	250	775	445	470	400	352	313	48	3	4.5	12-Φ41
	300	900	474	530	460	412	364	54	4	4.5	16-Φ41
	350	1025	514	595	525	475	422	60	4	5	16-Φ41
	400	1150	616	670	585	525	474	66	4	5	16-Φ48
H44H/W/Y-100C/P/R	50	300	210	195	145	112	88	28	3	4	8-Φ25
	65	340	227	220	170	138	110	32	3	4	8-Φ25
	80	380	235	230	180	148	121	34	3	4	8-Φ25
	100	430	274	265	210	172	150	38	3	4.5	8-Φ30
	150	550	340	350	290	250	204	46	3	4.5	12-Φ34
	200	650	374	430	360	312	260	54	3	4.5	12-Φ41
	250	775	440	500	430	382	313	60	3	4.5	12-Φ41
	300	900	505	585	500	442	364	70	4	4.5	16-Φ48

* FPH44 Y/H -150lb、300lb、600lb 旋启式止回阀 LOW TEMPERATURE SWING CHECK VALVE



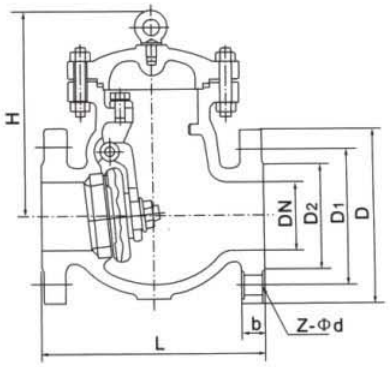

■应用规范

1、设计制造按BS 1868、JIS B2071

2、结构长度

ANSI150~2500Lb按ANSL B16.10

JIS10/20K按JIS B2001

3、连接法兰

ANSI150~2500Lb按ANSL B16.5

JIS10/20K按JIS B2212、B2214

4、阀门检查和试验按API 598

■结构

B.B，旋启式

■主体材料

WCB、WC6、WC9、CF8、CF8M、CF3、CF3M

■Specification

1.Design and Manufacture comply with BS 1868,JIS B2071

2.Face to face dimension comply

ANSI150~2500Lb按ANSL B16.10

JIS10/20K按JIS B2001

3.Connection flange

ANSI150~2500Lb按ANSL B16.5

JIS10/20K按JIS B2212、B2214

4.Test and inspection acc to API 598

■Construction

B.B,Swing Type

■Main Material

WCB、WC6、WC9、CF8、CF8M、CF3、CF3M

■主要连接及外形尺寸 Main connection and external dimensions

公称压力PN(Lb) Nominal Pressure	公称通径NPS Nominal diameter		d	L	D	D_1	D_2	b	H_1	Z-Φd
	in	mm								
150	11/2	40	38	165	127	98.5	73	15	154	4-Φ15
	2	50	51	203	152	120.5	92	16	175	4-Φ19
	21/2	65	64	216	178	139.5	105	18	177	4-Φ19
	3	80	76	241	190	152.5	127	19	191	4-Φ19
	4	100	102	292	229	190.5	157	24	222	8-Φ19
	6	150	152	356	279	241.5	216	26	325	8-Φ22
	8	200	203	495	343	298.5	270	29	383	8-Φ22
	10	250	254	622	406	362	324	31	448	12-Φ25
	12	300	305	698	483	432	381	32	540	12-Φ25
	14	350	357	787	533	476	413	35	560	12-Φ29
300	11/2	40	38	241	156	114.3	73	21	172	4-Φ22
	2	50	51	267	165	127	92	23	198	8-Φ19
	21/2	65	64	292	190	149	105	26	204	8-Φ22
	3	80	76	318	210	168.3	127	29	222	8-Φ22
	4	100	102	356	254	200	157	32	277	8-Φ22
	6	150	152	444	318	269.9	216	37	346	12-Φ22
	8	200	203	533	381	330	270	42	412	12-Φ25
	10	250	254	622	445	387.5	324	48	465	16-Φ29
	12	300	305	711	521	451	381	51	562	16-Φ32

＊FPH49X型 微阻缓闭蝶式止回阀 structures charcteristies and usade

■结构特点及用途Structures charcteristics and usahe

本阀是安装于管路中或水泵出口处用于泵停机时防止管路中压差水锤冲击水泵倒转的安全装置。具有结构新颖、体积小、重量轻、流体阻力小、密封可靠、启闭平稳、使用寿命长、有较好节能效果等特点。

适用于给排水、消防、暖通等系统的有关管路或泵出口处防止介质倒流所产生的水锤对泵与管路的损害，形成消声效果。

This valve is a safety device mounted in the pipeline or pump outlet to prevent the pump from inversed running due to the differential water hammer's shock in the pipeline when the pump stops and features a brand-new structure, small volume, light weight,small fluid resisteance, reliable seal, stable open-close, long duration, better energy-saving effect.

Suitable for the pipeline related to water supply and drainage, fire-fighting, warming etc. Systems or the pump outlet to prevent both pump and pipeline from being damaged due to the water hammer produced when the medium flows back and form the silencing effect.

■主要技术参数 Main technique number

公称压力PN(mm) Nominal pressure		1.0	1.6
试验压力 Test pressure (Mpa)	壳体强度 Shell strength	1.5	2.4
	密封性能 Sealing performance	1.1	1.76
工作温度(℃) Working temperature		≤80	
适用介质 Applicable medium		清水Clean-water、污水、海水Sea	
缓闭时间(S) Slow-close time		0~60	

■主要零件材料 Material for main partes

零件名称 Name of part	阀 体 Body	阀 瓣 Disc	阀 杆 Stem 油缸Oil oylinder 油塞Oil cork	弹 簧 Spring	阀 座 Seat
材 质 Material	铸铁CI、碳钢Bowl-shaped steel	碳钢Bowl-shaped steel 不锈钢 Stainless steel	不锈钢 Stainless steel	不锈钢 Stainless steel	丁晴橡胶 NBR

■主要外形及连接尺寸 Main external and connecting dimensions

公称通径 Nominal diameter DN(mm)	公称压力 Nominal pressure DN(mm)	L	D	D_1	D_2	b	H	H_1	n-Φd
50	10/16	160	165	125	100	20	105	110	4-18
65		170	185	145	120	20	110	115	4-18
80		180	200	160	135	22	115	120	4-18/8-18
100		190	220	180	158	24	130	228	8-18
150		210	285	240	212	26	172	230	8-23
200		230	340	295	268	28	210	270	8-23/12-23
250		250	395/405	350/355	320	28/30	240	305	12-23/12-25
300		270	445/460	400/470	370	28/30	264	367	12-23/12-25
350		290	505/520	460/470	430	30/34	294	422	16-23/16-25
400		310	565/580	515/525	482	32/36	324	462	16-25/16-30
450		330	615/640	565/585	532	32/40	351	497	20-25/20-30
500		350	670/715	620/650	585	34/44	379	532	20-25/20-34
600		390	780/840	725/770	685	36/48	434	607	20-30/20-37
700		430	895/910	840	800	40/50	491	702	24-30/24-37
800		470	1015/1025	950	905	44/52	549	792	24-34/24-41
900		510	1115/1125	1050	1005	46/54	600	900	28-34/28-41
1000		550	1230/1255	1160/1170	1110	50/56	655	975	28-34/28-45
1200		630	1455/1485	1380/1390	1330	56/58	770	1140	32-41/32-51



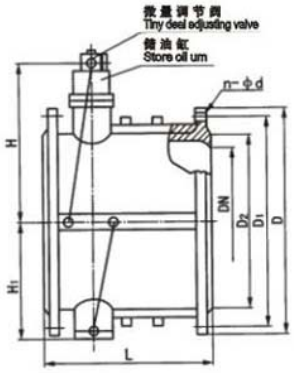

*FP J41 / J941 -PN16、2450、64、100、160 截止阀 GLOBE VALVE

■结构特点及用途

1、全关时手轮按顺时针方向旋转。
2、可以安装在管道的任何位置上，介质从下往上流。
3、不锈钢截止阀适用于各类腐蚀性介质的管道上，有良好的防腐性和足够的强度。
4、合金钢截止阀适用于耐高温的蒸气、油品管道上，具有耐高温特点。

■Strucure feature and usages

1、When fully closed,handwheel rotates rotates clockwise.
2、Able to be mounted an any position of the pipeline,the medium flows flows from down to up.
3、Stainless steel made stop valve is of good anti-corrosive property and enough strength and suitable for various pipelines with corrosive medium.
4、Alloy steel made stop valve features high-temperature resstance,suitable for high-temperatue steam and oil goods pipelies.

■设计、制造标准

1、设计制造按JB/T 12235-89
3、法兰连接尺寸按：JB/T 79-94
4、阀门检查和试验按GB/T 13927-92

■Standard for design and manufacture

1、Design Manafacfure According to GB/T 12235-89
2、Flange Dimension According to JB/T 79-94
3、Valve Checkand Test According to GB/T 13927-92

■试验压力 Test pressure

公称压力PN（MPa）Nominal Pressure	1.6	2.5	4.0	6.4	10.0	16.0
壳体强度试验 Shell stength test	2.4	3.75	6.0	9.6	15	24
上密封试验 Back seal test	1.76	2.75	4.4	7.04	11	17.6
密封试验 Seal test (Mpa)	1.76	2.75	4.4	7.04	11	17.6

■使用范围 Applicable

产品类型 Product type	适用介质 Suitable medium	适用温度（℃）Suitable medium
J41Y-C型 J941Y-C型	水、蒸汽、油品 Water,steam,oilgoods	≤425℃
J41W-P型 J941W-P型	硝酸类 Nitric acid	≤200℃
J41W-R型 J941W-R型	醋酸类 Acetic acid	≤200℃
J41Y-I型 J941Y-I型	水、蒸汽、油品 Water,steam,oil goods	≤550℃

■主要零件材料 Material for main parts

产品类型 Product type	零件名称 Part name							
	阀体、阀盖 Body,Bonnet	阀杆 Valve stem	阀瓣 Disc	密封面 Sealing face	阀杆螺母 Yoke nut	填料 Packing	紧固件 Fastener	手轮 Handwheel
J41Y-C型 J941Y-C型	25.WCB	铬不锈钢Cr. Stainles steel	2Cr1325	H:不锈钢 Y：钴基硬质合金钢 H：Stainless steel Y:Co-based carbide alloy steel	ZQA19-4 铝青铜 Al bronze	柔性石墨 Flexible graphite	优质碳钢 High-grade carbon steel	可锻铸钢 Forgeable cast-ironl
J41W-P型 J941W-P型	铬镍钛钢 Cr.Ni.Ti.steel	铬镍钛钢 Cr.Ni.Ti.steel	铬镍钛钢 Cr.Ni.Ti.steel	铬镍钛钢 Cr.Ni.Ti.steel	ZQA19-4 铝青铜 Al bronze	柔性石墨 Flexible graphite	不锈钢 Stainess steel	可锻铸钢 Forgeable cast-ironl
J41W-R型 J941W-R型	铬镍钛钢 Cr.Ni.Ti.steel	铬镍钛钢 Cr.Ni.Ti.steel	铬镍钛钢 Cr.Ni.Ti.steel	铬镍钛钢 Cr.Ni.Ti.steel	ZQA19-4 铝青铜 Al bronze	柔性石墨 Flexible graphite	不锈钢 Stainess steel	可锻铸钢 Forgeable cast-ironl
J41Y-I型 J941Y-I型	铬钼钢 Cr.Mo.steel	铬钼钢 Cr.Mo.steel	合金钢 Alloy steel	钴基硬质合金钢 Co-based carbide alloy steel	ZQA19-4 铝青铜 Al bronze	柔性石墨 Flexible graphite	合金钢 Alloy steel	可锻铸钢 Forgeable cast-ironl

*FP J41 / J941 -PN16、25、64、100、160 截止阀 GLOBE VALVE



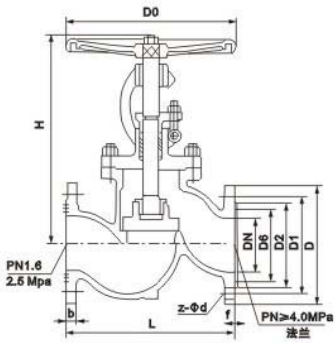

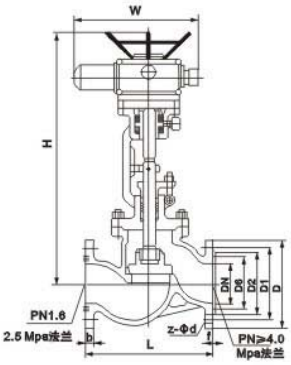

■主要外形及连接尺寸 Main external and connecting dimension(mm)

公称通径 DN Noninal diameter	J41Y-16 J41W-16P J41W-16R J41W-16I J941Y-16 J941W-16R J941Y-16I										
	主要外形尺寸及连接尺寸（mm）Main external dimensions and connecting dimensions										电动装置 Electric device
	L	D	D_1	D_2	b	F	z-Φd	H手	H电	D_0	
10	130	90	60	40	14	2	4-Φ14	198	–	120	ZB5
15	130	95	65	45	14	2	4-Φ14	218	–	120	ZB5
20	150	105	75	55	14	2	4-Φ14	258	–	140	ZB5
25	160	115	85	65	14	2	4-Φ14	275	–	160	ZB5
32	180	135	100	78	16	2	4-Φ18	280	–	180	ZB15
40	200	145	110	85	16	3	4-Φ18	330	–	200	ZB15
50	230	160	125	100	16	3	4-Φ18	350	645	240	ZB15
65	290	180	145	120	18	3	4-Φ18	355	690	280	ZB15
80	310	195	160	135	20	3	8-Φ18	400	715	280	ZB15
100	350	215	180	155	22	3	8-Φ18	415	770	320	ZB20
125	400	245	210	185	24	3	8-Φ18	460	780	360	ZB40
150	480	280	240	210	26	3	8-Φ23	510	875	400	ZC45
200	600	335	295	265	28	3	12-Φ23	710	967	450	ZC60
250	650	405	355	320	30	3	12-Φ25	786	–	500	ZC90
300	750	460	410	375	34	4	16-Φ25	925	–	500	ZC120
公称通径 DN Noninal diameter	J41Y-25 J41W-25P J41W-25R J41W-25I J941Y-25 J941W-25R J941Y-25I										
	主要外形尺寸及连接尺寸（mm）Main external dimensions and connecting dimensions										电动装置 Electric device
	L	D	D_1	D_2	b	F	z-Φd	H手	H电	D_0	
10	130	90	60	40	16	2	4-Φ14	198	–	120	ZB5
15	130	95	65	45	16	2	4-Φ14	218	–	120	ZB5
20	150	105	75	55	16	2	4-Φ14	258	–	140	ZB5
25	160	115	85	65	16	2	4-Φ14	275	–	160	ZB5
32	180	135	100	78	18	2	4-Φ18	280	–	180	ZB15
40	200	145	110	85	18	3	4-Φ18	330	–	200	ZB15
50	230	160	125	100	20	3	4-Φ18	350	645	240	ZB15
65	290	180	145	120	22	3	8-Φ18	355	690	280	ZB15
80	310	195	160	135	22	3	8-Φ18	400	715	280	ZB15
100	350	230	190	160	24	3	8-Φ23	415	770	320	ZB20
125	400	270	220	188	28	3	8-Φ25	460	780	360	ZB40
150	480	300	250	218	30	3	8-Φ25	510	875	400	ZC45
200	600	360	310	278	34	3	12-Φ25	710	967	400	ZC60
250	650	425	370	332	36	3	12-Φ30	786	–	450	ZC90
300	750	485	430	390	40	4	16-Φ30	925	–	500	ZC120

公称通径 DN Noninal diameter	J41Y-40 J41W-40P J41W-40R J41W-40I J941Y-40 J941W-40R J941Y-40I												
	主要外形尺寸及连接尺寸（mm）Main external dimensions and connecting dimensions												电动装置 Electric device
	L	D	D_1	D_2	D_6	B	f	f_2	z-Φd	H手	H电	D_0	
10	130	90	60	40	35	16	2	4	4-Φ14	198	–	120	ZB5
15	130	95	65	45	40	16	2	4	4-Φ14	233	–	120	ZB5
20	150	105	75	55	51	16	2	4	4-Φ14	275	–	140	ZB5
25	160	115	85	65	58	16	2	4	4-Φ14	285	–	160	ZB5
32	180	135	100	78	66	18	2	4	4-Φ18	302	–	180	ZB5
40	200	145	110	85	76	18	3	4	4-Φ18	355	–	200	ZB15
50	230	160	125	100	88	20	3	4	4-Φ18	373	645	240	ZB15
65	290	180	145	120	110	22	3	4	8-Φ18	408	690	280	ZB15
80	310	195	160	135	121	22	3	4	8-Φ18	436	715	320	ZB20
100	350	230	190	160	150	24	3	4.5	8-Φ23	480	770	360	ZB40
125	400	270	220	188	176	28	3	4.5	8-Φ25	558	782	400	ZC45
150	480	300	250	218	204	30	3	4.5	8-Φ25	611	875	400	ZC60
200	600	375	320	282	260	38	3	4.5	12-Φ30	720	1160	400	ZC90

*FP J41 / J941 -PN16、25、64、100、160 截止阀 GLOBE VALVE

■主要外形及连接尺寸 Main external and connecting dimension

(mm)

公称通径 DN Noninal diameter	L	D	D_1	D_2	D_6	b	f	f_2	z-Φd	$H_{手}$	$H_{电}$	D_0	电动装置 Electric device
J41H/Y-64 J41W/Y-64P/R J41Y-64I J941H-64 J941H/Y-64P/R J941Y-64I													
10	170	100	70	50	35	18	2	4	4-Φ14	195	–	120	ZB5
15	170	105	75	55	40	18	2	4	4-Φ14	198	–	140	ZB5
20	190	125	90	68	51	20	2	4	4-Φ18	228	–	160	ZB5
25	210	135	100	78	58	22	2	4	4-Φ18	275	–	180	ZB5
32	230	150	110	82	66	24	2	4	4-Φ23	325	–	200	ZB5
40	260	165	125	95	76	24	3	4	4-Φ23	360	–	240	ZB15
50	300	175	135	105	88	26	3	4	4-Φ23	410	710	280	ZB15
65	340	200	160	130	110	28	3	4	8-Φ23	450	750	320	ZB15
80	380	210	170	140	121	30	3	4	8-Φ23	485	785	360	ZB40
100	430	250	200	168	150	32	3	4.5	8-Φ25	537	837	400	ZC45
125	500	295	240	202	176	36	3	4.5	8-Φ30	631	–	400	ZC60
150	550	340	280	240	204	38	3	4.5	8-Φ34	646	–	450	ZC90
200	650	405	345	300	260	44	3	4.5	12-Φ34	813	–	500	ZC120
J41H/Y-100 J41W/Y-100P/R J41H/Y-100I J941H/Y-100 J941W-100P/R J941H/Y-100I													
10	170	100	70	50	35	20	2	4	4-Φ14	198	–	120	ZB5
15	170	105	75	55	40	20	2	4	4-Φ14	202	–	140	ZB5
20	190	125	90	68	51	22	2	4	4-Φ18	228	–	160	ZB5
25	210	135	100	78	58	24	2	4	4-Φ18	250	–	180	ZB15
32	230	150	110	82	66	24	2	4	4-Φ23	326	–	220	ZB15
40	260	165	125	95	76	26	3	4	4-Φ23	359	–	240	ZB15
50	300	195	145	112	88	28	3	4	4-Φ25	414	710	280	ZB15
65	340	220	170	138	110	32	3	4	8-Φ25	434	750	320	ZB20
80	380	230	180	148	121	34	3	4	8-Φ25	547	785	400	ZB30
100	430	265	210	172	150	38	3	4.5	8-Φ30	621	837	450	ZC45
125	500	310	250	210	176	42	3	4.5	8-Φ34	732	–	450	ZC60
150	550	350	290	250	204	46	3	4.5	12-Φ34	840	–	500	ZC120
200	650	430	360	312	260	54	3	4.5	12-Φ41	925	–	550	ZC180
J41H/Y-160 J41W/Y-160P/R J41Y-160I J941H/Y-160 J941W-160P/R J941Y-160I													
15	170	110	75	52	40	24	2	4	4-Φ18	148	–	140	ZB15
20	190	130	90	62	51	26	2	4	4-Φ23	156	–	160	ZB15
25	210	140	100	72	58	28	2	4	4-Φ23	125	–	180	ZB20
32	230	165	115	85	66	30	2	4	4-Φ25	200	–	200	ZB20
40	260	175	125	92	76	32	3	4	4-Φ27	231	–	240	ZB40
50	300	215	165	132	88	36	3	4	8-Φ25	262	–	250	ZC60
65	340	245	190	152	110	44	3	4	8-Φ30	303	–	320	ZC60
80	380	260	205	168	121	46	3	4	8-Φ30	341	–	400	ZC90
100	430	300	240	200	150	48	3	4.5	8-Φ34	485	–	450	ZC120

*FPJ41B-16、25 氨截止阀 GLOBE VALVE



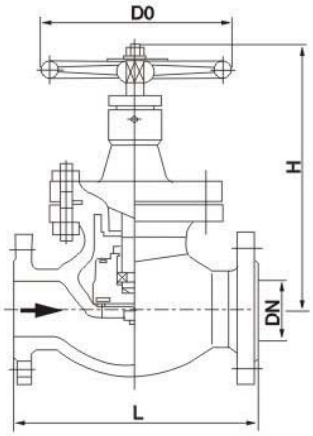

■主要性能规范 Chief property and specifieation

型号 Type	公称压力PN（MPa） Noninal pressure	适用温度（℃） Applicable temperature	适用介质 Applicable medium	材料 Material					
				阀体、阀盖 Body、Bonnet	阀瓣Disc	密封面seal ring	阀杆stem	填料Packing	阀杆螺母 Yoke nut
J41B-25	2.5	-40~150	氨、氨液	碳素钢Carbon steel	碳素钢Carbon steel	巴氏合金	不锈钢Stainless steel	聚四氟乙烯	铜合金

■主要外形及连接尺寸 Main external and connecting dimension(mm)

(mm)

型号 Type	公称通径DN Noninal diameter	L	H	D	D_1	D_2	b	f	z-Φd	D_0
J41B-16	15	130	207	95	65	45	16	2	4-Φ14	120
	20	150	217	105	75	55	16	2	4-Φ14	140
	25	160	219	115	5	65	16	2	4-Φ14	160
	32	190	280	135	100	78	18	2	4-Φ18	180
	40	200	330	145	110	85	18	3	4-Φ18	200
	50	230	350	160	125	100	20	3	4-Φ18	240
	65	290	400	180	145	120	22	3	4-Φ18	280
	80	310	430	195	160	135	22	3	8-Φ18	320
	100	350	465	215	180	155	24	3	8-Φ18	360
	125	400	502	245	210	185	28	3	8-Φ18	400
	150	480	560	280	240	210	30	3	8-Φ23	440
	200	600	580	335	295	265	34	4	12-Φ23	480
J41B-25	15	130	207	95	65	45	16	2	4-Φ14	120
	20	150	217	105	75	55	16	2	4-Φ14	140
	25	160	219	115	5	65	16	2	4-Φ14	160
	32	190	280	135	100	78	18	2	4-Φ18	180
	40	200	330	145	110	85	18	3	4-Φ18	200
	50	230	350	160	125	100	20	3	4-Φ18	240
	65	290	400	180	145	120	22	3	8-Φ18	280
	80	310	430	195	160	135	22	3	8-Φ18	320
	100	350	465	230	190	160	24	3	8-Φ23	360
	125	400	502	270	220	88	28	3	8-Φ25	400
	150	480	560	300	250	218	30	3	8-Φ25	440
	200	600	580	360	310	278	34	4	12-Φ30	480

*FP J11H / J61Y -PN16、25、40、64、100、160 锻钢截止阀 FOR GING STOP VALVE



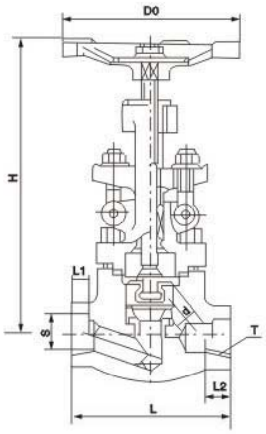

■设计、制造标准 Standard for design and manufacture

1. 设计制造 Disign

按GB/T 12224-89. GB/T 12228-89.

2. 连接端尺寸 Connecting botten dimensions

(1)承插孔尺寸按JB/T 1751-75 hole dimension

(2)螺纹端尺寸按GB/T7306-87 Thread dimension

3. 阀门检验和试验Valves inspect inspect and test:

按GB/T 13927-92

4. 材料 Material

(1)碳钢按GB/T699的规定Carbon steel according to GB/T 699

(2)不锈钢按GB/T 1220的规定Stainless steel according to GB/T 1220

(3)耐热钢按GB/T 1221的规定

Heat-resisting steel be accordance with GB/T 1221

■主要零件材料 Material for main parts

主要零件名称 Main parts name	材 料 Material
阀体. 阀盖 body Bonnet	碳 钢 Carbon steel
阀 座 Seat ring	不锈钢 Stainless steel
阀 瓣 Disc	不锈钢 Stainless steel
阀 杆 Stem	不锈钢 Stainless steel
垫 片 Seat	不锈钢+石墨 Stainless steel steel and Graphite
填 料 Packing	柔性石墨 Flexible grapnite

■主要性能规范 Chief property and specifieation

试验项目 Test item \ PN	1.6	2.5	4.0	6.4	10.0	16.0
强度试验PS Sell strength test	2.4	3.75	6.0	9.6	15.0	24.0
密封试验P Seal test	1.76	2.75	4.4	7.04	11.0	17.0
气密封试验 Leak-proofness test	0.6					
使用温度 Applicable temperature	≤425℃					
适用介质 Applicable medium	水、油品、蒸汽 Water、Oil、Steam					

■主要外形及连接尺寸 Main external and connecting dimension

(mm)

PN 代号	1.6,2.5,4.0MPa						6.4MPa						10.0MPa						16.0MPa					
DN	15	20	25	32	40	50	15	20	25	32	40	50	15	20	25	32	40	50	15	20	25	32	40	
L	80	90	100	120	140	170	80	90	100	120	140	170	80	90	100	120	140	170	80	90	100	120	140	
S	22.5	28.5	34.5	43	49	61	22.5	28.5	34.5	43	49	61	22.5	28.5	34.5	43	49	61	22.5	28.5	34.5	43	49	
L_1	10	11	12	14	15	16	10	11	12	14	15	16	10	11	12	14	15	16	10	11	12	14	15	
T	1/2	3/4	1	11/2	11/2	2	1/2	3/4	1	11/4	11/2	2	1/2	3/4	1	11/4	11/2	2	1/2	3/4	1	11/4	11/2	
L_2	15	17	19	21	21	25	15	17	19	21	21	25	15	17	19	21	21	25	15	17	19	21	21	
D	13	18	23	29	36	46	13	18	23	29	36	46	13	18	23	29	36	46	13	18	23	29	36	
H	159	190	208	216	247	290	159	190	208	227	258	405	159	190	208	227	258	405	159	190	208	227	258	
D0	98	112	126	166	188	220	98	112	126	166	188	220	98	112	126	166	188	220	98	112	126	166	188	
重量(kg)	3	4	5	7	12	18	3	4	5	8	14	20	3	4	5	8	14	20	3	4	5	8	14	

说明： 1. “H” 口密封付其密封件材质为合金钢。 “Y” 密封件材质为堆焊硬质合金。

2. 其它填料和垫片材料均可提供，满足用户要求。

Expianation：1.The rim about “H” and sealed bodg be part of stainless steel.Matetials for seaied body about"Y"be part of pile we ng co stiff allog.

2.The seat and other packing may provide and satisy customer demand.

Z41
FP Z40 PN16、25、40、64、100、160 楔式闸阀 WEDGE GATE VALVE
Z42

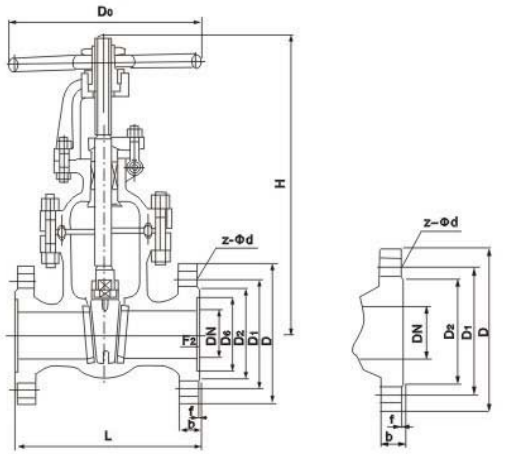

PN1.6MPa–25MPa

■主要特点及用途

1、结构紧凑、设计合理，阀门刚性好，通道流畅，流阻系数小。
2、密封面采用不锈钢和硬质合金，使用寿命长。
3、采用柔性石墨填料、密封可靠，操作轻便灵活。
4、驱动方式分别有手动、电动、气动、齿轮传动，结构型式：弹性楔式单闸板、刚性楔式单闸板和双闸板型式。
5、广泛适用于石油、化工、火力发电厂等油品、水、蒸汽管路上作接通或截断管路中介质的启闭装置。

■Chief feature and usages

1、Compact structure, reasonable design, good rigidity, smooth channel, small coefficient of flow resistance.
2、The sealing face uses stainless steel and carbide alloy and is of long duration.
3、Using flexible graphite filligs, reliable sealing, lingt and sinble operation.
4、Four driving ways, manually, electrically, airioerating and geardriving,structure type, elastic wedge type with single gate board, rigid wedge type with single of dualgate board.
5、Widely used as the device of open or close to connect or cut off the medium inside of the pipeline of water, steam or oil goods in steam power plants.

■设计、制造标准 Standard for design and manufacture

1、设计制造按GB/T 12234–89
2、法兰连接尺寸按：JB/T 79–94
3、阀门检查和试验按GB/T 13927–92
1、DesignManafacfure According to GB/T 12234–89
2、FlangeDimensionAccording to JB/T 79–94
3、Valve Checkand Test According to GB/T 13927–92

■主要性能规范 Chief property and specification

公称压力 PN(MPa) Nominal pressure	试验压力(MPa)Test pressure			
	壳体 Shell	密封(液) Seal	密封(气) Seal	上密封 Back seat
1.6	2.4	1.76	0.6	1.76
2.5	3.8	2.75		2.75
4.0	6.0	4.4		4.4
6.4	9.6	7.04		7.04
10.0	15.0	11.0		11.0
16.0	24.0	17.6		17.6

■适用范围 Suitable scope

壳体材料 Shell material	适用介质 Applicable medium	适用温度(℃) Applicable temperature
碳素钢(C型) Carbon,steel(C Type)	水、蒸气、油品 Water,Steam, Oil goods	≤425
铬镍钛钢 Cr.Ni.Ti steel	硝酸类 Nitric acid	≤200
铬镍钼钛钢 Cr.Ni.Mo.Ti stee	醋酸类 Acetic acid	≤200
铬钼钢(I型) Cr.Mo steel(I tpe)	水、蒸气、油品 Water,steam,oil goods	≤550

■主要零件材料 Material for main parts

阀体、阀盖 Body、Bonnet	闸板、阀座 Wedge disc、Seat ring	阀杆 Stem	阀杆螺母 Yoke nut	填料 Packing	手轮 Hand wheel
碳素钢 Carburizing steel	优质碳钢+硬质合金或不锈钢 High–grade carbon steel+ carbide alloy or stainless steel	铬不锈钢 Cr.stainless Steel	ZQAL 9–4 铝青铜 Al bronze	柔性石墨 Grapnie.asbestos coils	可锻铸铁 Forgablecast–iron
铬镍钛钢 Cr.Ni.Ti steel	不锈钢、不锈钢+硬质合金 Stainless steel+carbide alloy	铬镍钛不锈钢 Cr.Ni.Ti. stainless steel	ZQAL 9–4 铝青铜 Al bronze	浸聚四氟乙烯 Dipping polytetrafluo–roethylene	可锻铸铁 Forgablecast–iron
铬镍铜钛钢 Cr.Ni.Mo.Ti stee	不锈钢、不锈钢+硬质合金 Stainless steel+carbide alloy	铬镍钼钛不锈钢 Cr.Ni.Mo.Ti stainless steel	ZQAL 9–4 铝青铜 Al bronze	烯石棉盘根 Asbestos coil	可锻铸铁 Forgablecast–iron
铬钼钢 Cr.Mo steel	合金钢+硬质合金 Alloy steel +Carbide alloy	铬钼铝钢 Cr.Mo.Ai steel	ZQAL 9–4 铝青铜 Al bronze	柔性石墨 Flexibie Graphite	铬钼可锻铸铁 Forgable cast–iron

Z41

FP Z40 PN16、25、40、64、100、160 楔式闸阀 WEDGE GATE VALVE

Z42

■主要连接及外形尺寸 Main connection and external dimensions

(mm)

公称通径DN(mm) Nominal diameter	L	D	D_1	D_2	b	f	z-Φd	H	H_1	D_o
	Z40 H Z41 Y Z42 -16C			Z40 Y Z41W Z42 H -16P		Z40W Z41 Y Z42 H -16R		Z40 H Z41 Y Z42 -16I		
15	130	95	65	45	14	2	4-Φ14	220	240	120
20	150	105	75	55	14	2	4-Φ14	255	284	140
25	160	115	85	65	14	2	4-Φ14	275	303	160
32	180	135	100	78	16	2	4-Φ18	280	321	180
40	200	145	110	85	16	3	4-Φ18	300	352	200
50	250	160	125	100	16	3	4-Φ18	358	438	240
65	265	180	145	120	18	3	4-Φ18	375	450	240
80	280	195	160	135	20	3	8-Φ18	433	528	280
100	300	215	180	155	20	3	8-Φ18	502	620	320
125	325	245	210	185	22	3	8-Φ18	612	753	360
150	350	280	240	210	24	3	8-Φ23	676	847	360
200	400	335	295	265	26	3	12-Φ23	820	1039	400
250	450	405	355	320	30	4	12-Φ25	969	1245	450
300	500	460	410	375	30	3	12-Φ25	1142	1472	560
350	550	520	470	435	34	4	16-Φ25	1280	1450	640
400	600	580	525	485	36	4	16-Φ30	1452	1887	640
450	650	640	585	545	40	4	20-Φ30	1541	2011	720
500	700	705	650	608	44	4	20-Φ34	1676	2181	720
600	800	840	770	718	48	5	20-Φ41	1874	2346	800
700	900	910	840	788	50	5	24-Φ41	2139	2819	880
800	1000	1020	950	898	52	5	24-Φ41	2293	3043	980
900	1100	1120	1050	998	54	5	28-Φ41	2595	3445	1080
1000	1200	1255	1170	1110	56	5	28-Φ48	2733	3683	1180
1200	1350	1485	1390	1350	58	5	32-Φ54	3032	4100	1300
	Z40 H Z41 Y Z42 -25C			Z40 Y Z41W Z42 H -25P		Z40W Z41 Y Z42 H -25R		Z40 H Z41 Y Z42 -25I		
15	130	95	65	45	16	2	4-Φ14	220	240	120
20	150	105	75	55	16	2	4-Φ14	255	284	140
25	160	115	85	65	16	2	4-Φ14	275	303	160
32	180	135	100	78	18	2	4-Φ18	280	321	180
40	200	145	110	85	18	3	4-Φ18	300	352	200
50	250	160	125	100	20	3	4-Φ18	358	438	240
65	265	180	145	120	22	3	8-Φ18	375	450	240
80	280	195	160	135	22	3	8-Φ18	433	528	280
100	300	230	190	160	24	3	8-Φ23	502	620	320
125	325	270	220	188	28	3	8-Φ25	612	753	360
150	350	300	250	218	30	3	8-Φ25	676	847	360
200	400	360	310	278	34	3	12-Φ25	820	1039	400
250	450	425	370	332	36	3	12-Φ30	969	1245	450
300	500	485	430	390	40	4	16-Φ30	1142	1472	560
350	550	550	490	448	44	4	16-Φ34	1280	1450	640
400	600	610	550	505	48	4	16-Φ34	1452	1887	640
450	650	660	600	555	50	4	20-Φ34	1541	2011	720
500	700	730	660	610	52	4	20-Φ41	1676	2181	720
600	800	840	770	718	56	5	20-Φ41	1874	2346	800
700	900	955	875	815	60	5	24-Φ48	2139	2819	880
800	1000	1070	990	930	64	5	24-Φ48	2293	3043	980

Z41
FP Z40 PN16、25、40、64、100、160 楔式闸阀 WEDGE GATE VALVE
Z42

主要连接及外形尺寸 Main connection and external dimensions

(mm)

公称通径 DN(mm) Nominal diameter	L	D	D1	D2	D6	b	f	F2	Z-Φd	H	H1	D0
		Z40 H Z41 Y Z42 -40		Z40 H Z41Y Z42 W -40P			Z40H Z41Y Z42W -40R		Z40 H Z41 Y Z42 -40I			
20	150	105	75	55	51	16	2	4	4-Φ14	256	285	140
25	160	115	85	65	58	16	2	4	4-Φ14	275	305	160
32	180	135	100	78	66	18	2	4	4-Φ18	287	322	180
40	200	145	110	85	76	18	3	4	4-Φ18	323	369	200
50	250	160	125	100	88	20	3	4	4-Φ18	372	440	280
65	280	180	145	120	110	22	3	4	8-Φ18	395	473	280
80	310	195	160	135	121	22	3	4	8-Φ18	457	552	320
100	350	230	190	160	150	24	3	4.5	8-Φ23	552	671	360
125	400	270	220	188	176	28	3	4.5	8-Φ25	634	726	400
150	450	300	250	218	204	30	3	4.5	8-Φ25	708	883	400
200	550	375	320	282	260	38	3	4.5	8-Φ30	858	1086	450
250	650	445	385	345	313	42	3	4.5	12-Φ34	1015	1298	560
300	750	510	450	408	364	46	4	4.5	16-Φ34	1203	1535	640
350	850	570	510	465	422	52	4	5	16-Φ34	1341	1678	640
400	950	655	585	535	474	58	4	5	16-Φ41	1492	1903	720
		Z40 H Z41 Y Z42 -64		Z40 H Z41 Y Z42 W -64P			Z40H Z41Y Z42W -64R		Z40 H Z41 Y Z42 -64I			
20	190	125	90	68	51	20	2	4	4-Φ18	258	288	180
25	210	135	100	78	58	22	2	4	4-Φ18	310	341	200
32	230	150	110	82	66	24	2	4	4-Φ23	320	353	200
40	240	165	125	95	76	24	3	4	4-Φ23	360	389	240
50	250	175	135	105	88	26	3	4	4-Φ23	372	448	280
65	280	200	160	130	110	28	3	4	8-Φ23	395	475	280
80	310	210	170	140	121	30	3	4	8-Φ23	458	553	320
100	350	250	200	168	150	32	3	4.5	8-Φ25	553	679	360
125	400	295	240	202	176	36	3	4.5	8-Φ30	638	779	400
150	450	340	280	240	204	38	3	4.5	8-Φ34	718	893	450
200	550	405	345	300	260	44	3	4.5	12-Φ34	873	1100	560
250	650	470	400	352	313	48	3	4.5	12-Φ41	1053	1332	640
300	750	530	460	412	364	54	4	4.5	16-Φ41	1203	1535	640
		Z40 H Z41 Y Z42 -100		Z40 H Z41 Y Z42 W -100P			Z40H Z41Y Z42W -100R		Z40 H Z41 Y Z42 -100I			
25	210	135	100	78	58	24	2	4	4-Φ18	310	341	200
32	230	150	110	82	66	24	2	4	4-Φ23	320	353	240
40	240	165	125	95	76	26	3	4	4-Φ23	360	389	280
50	250	195	145	112	88	28	3	4	4-Φ25	490	558	360
65	280	220	170	138	110	32	3	4	8-Φ25	540	622	400
80	310	230	180	148	121	34	3	4	8-Φ25	573	671	400
100	350	265	210	172	150	38	3	4.5	8-Φ30	575	671	400
125	400	310	250	210	176	42	3	4.5	8-Φ34	744	892	560
150	450	350	290	250	204	46	3	4.5	12-Φ34	800	972	560
200	550	430	360	312	260	54	3	4.5	12-Φ41	800	972	560
250	650	500	430	382	313	60	3	4.5	12-Φ41	1050	1305	640
300	750	585	500	442	364	70	4	4.5	16-Φ48	1208	1506	640
		Z40 H Z41 Y Z42 -160		Z40 H Z41 Y Z42 W -160P			Z40H Z41Y Z42W -160R		Z40 H Z41 Y Z42 -160I			
15	170	110	75	52	40	24	2	4	4-Φ18	230	250	200
20	190	130	90	62	51	26	2	4	4-Φ23	260	288	200
25	210	140	100	72	58	28	2	4	4-Φ23	280	310	280
32	230	165	115	85	66	30	2	4	4-Φ25	312	350	320
40	240	175	125	92	76	32	3	4	4-Φ27	350	395	320
50	300	215	165	132	88	36	3	4	8-Φ25	512	612	360
65	340	245	190	152	110	44	3	4	8-Φ30	560	677	360
80	390	260	205	168	121	46	3	4	8-Φ30	585	686	400
100	450	300	240	200	150	48	3	4.5	8-Φ34	631	751	450
125	525	355	285	238	176	60	3	4.5	8-Φ41	723	868	560
150	600	390	318	270	204	66	3	4.5	12-Φ41	820	997	640
200	750	480	400	345	260	78	3	4.5	12-Φ48	990	1224	720

注：Z40为楔式弹性闸板，Z41为楔式钢性闸板，Z42为楔式双闸板。Note:Z40 is the wedge elastic flashboard,Z41 is the wedge rigid flashboard,and Z42 is the wedge double flashboard.

Z41

FP Z40 PN16、25、40、64、100、160 楔式闸阀 WEDGE GATE VALVE

Z42

■主要连接及外形尺寸 Main connection and external dimensions

(mm)

公称通径DN(mm) Nominal diameter	L	D	D_1	D_2	b	f	z-Φd	H	H_1	D_o
	Z40 H Z41 Y Z42 -16C			Z40 Y Z41W Z42 H -16P		Z40W Z41 Y Z42 H -16R		Z40 H Z41 Y Z42 -16I		
15	130	95	65	45	14	2	4-Φ14	220	240	120
20	150	105	75	55	14	2	4-Φ14	255	284	140
25	160	115	85	65	14	2	4-Φ14	275	303	160
32	180	135	100	78	16	2	4-Φ18	280	321	180
40	200	145	110	85	16	3	4-Φ18	300	352	200
50	250	160	125	100	16	3	4-Φ18	358	438	240
65	265	180	145	120	18	3	4-Φ18	375	450	240
80	280	195	160	135	20	3	8-Φ18	433	528	280
100	300	215	180	155	20	3	8-Φ18	502	620	320
125	325	245	210	185	22	3	8-Φ18	612	753	360
150	350	280	240	210	24	3	8-Φ23	676	847	360
200	400	335	295	265	26	3	12-Φ23	820	1039	400
250	450	405	355	320	30	4	12-Φ25	969	1245	450
300	500	460	410	375	30	3	12-Φ25	1142	1472	560
350	550	520	470	435	34	4	16-Φ25	1280	1450	640
400	600	580	525	485	36	4	16-Φ30	1452	1887	640
450	650	640	585	545	40	4	20-Φ30	1541	2011	720
500	700	705	650	608	44	4	20-Φ34	1676	2181	720
600	800	840	770	718	48	5	20-Φ41	1874	2346	800
700	900	910	840	788	50	5	24-Φ41	2139	2819	880
800	1000	1020	950	898	52	5	24-Φ41	2293	3043	980
900	1100	1120	1050	998	54	5	28-Φ41	2595	3445	1080
1000	1200	1255	1170	1110	56	5	28-Φ48	2733	3683	1180
1200	1350	1485	1390	1350	58	5	32-Φ54	3032	4100	1300
	Z40 H Z41 Y Z42 -25C			Z40 Y Z41W Z42 H -25P		Z40W Z41 Y Z42 H -25R		Z40 H Z41 Y Z42 -25I		
15	130	95	65	45	16	2	4-Φ14	220	240	120
20	150	105	75	55	16	2	4-Φ14	255	284	140
25	160	115	85	65	16	2	4-Φ14	275	303	160
32	180	135	100	78	18	2	4-Φ18	280	321	180
40	200	145	110	85	18	3	4-Φ18	300	352	200
50	250	160	125	100	20	3	4-Φ18	358	438	240
65	265	180	145	120	22	3	8-Φ18	375	450	240
80	280	195	160	135	22	3	8-Φ18	433	528	280
100	300	230	190	160	24	3	8-Φ23	502	620	320
125	325	270	220	188	28	3	8-Φ25	612	753	360
150	350	300	250	218	30	3	8-Φ25	676	847	360
200	400	360	310	278	34	3	12-Φ25	820	1039	400
250	450	425	370	332	36	3	12-Φ30	969	1245	450
300	500	485	430	390	40	4	16-Φ30	1142	1472	560
350	550	550	490	448	44	4	16-Φ34	1280	1450	640
400	600	610	550	505	48	4	16-Φ34	1452	1887	640
450	650	660	600	555	50	4	20-Φ34	1541	2011	720
500	700	730	660	610	52	4	20-Φ41	1676	2181	720
600	800	840	770	718	56	5	20-Φ41	1874	2346	800
700	900	955	875	815	60	5	24-Φ48	2139	2819	880
800	1000	1070	990	930	64	5	24-Φ48	2293	3043	980

Z940

FP Z941 PN16、25、40、64、100、160 电动楔式闸阀 ELECTROMTOR WED GATEDE VALVE

Z942



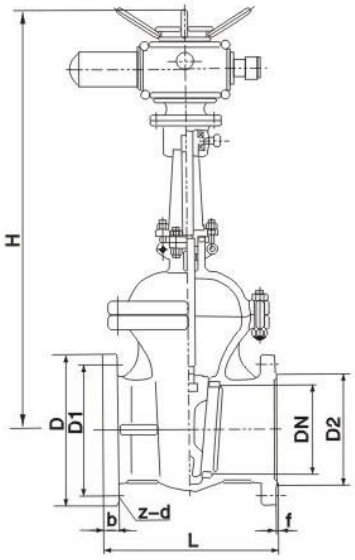

PN1.6~25MPa
连接法兰
Flange end

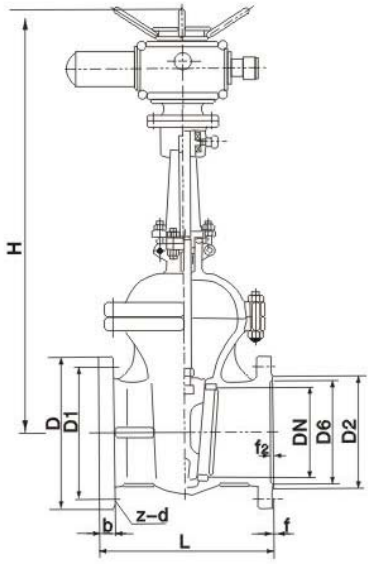

PN≥4.0MPa
连接法兰
Flange end

■主要连接及外形尺寸 Main connection and external dimensions

(mm)

公称通径DN(mm) Nominal diameter	L	D	D1	D2	b	f	z-Φd	H	电动装置型号 Electirc device model
Z940H Z941Y Z942V-16C			Z940W Z941Y-16P Z942H			Z940W Z941Y-16R Z942H		Z940H Z941Y Z942V-16I	
40	200	145	110	85	16	3	4-Φ18	595	ZB15
50	250	160	115	100	16	3	4-Φ18	653	ZB15
65	265	180	145	120	18	3	4-Φ18	665	ZB15
80	280	195	160	135	20	3	8-Φ18	725	ZB15
100	300	215	180	155	20	3	8-Φ18	787	ZB15
125	325	245	210	185	22	3	8-Φ18	806	ZB20
150	350	280	240	210	24	3	8-Φ23	955	ZB20
200	400	335	295	265	26	3	12-Φ23	1105	ZB40
250	450	405	355	320	30	3	12-Φ25	1343	ZB40
300	500	460	410	375	30	4	12-Φ25	1516	ZC45
350	550	520	470	435	34	4	16-Φ25	1678	ZC45
400	600	580	525	485	36	4	16-Φ30	1849	ZC90
450	650	640	585	545	40	4	20-Φ30	1937	ZC90
500	700	705	650	608	44	4	20-Φ34	2234	ZC120
600	800	840	770	718	48	5	20-Φ41	2432	ZC180
700	900	910	840	788	50	5	24-Φ41	2489	ZC250
800	1000	1020	950	898	52	5	24-Φ41	2643	ZC350
900	1100	1125	1050	998	54	5	28-Φ41	2945	ZC500
1000	1200	1255	1170	1110	56	5	28-Φ48	3083	ZC500
1200	1350	1485	1390	1325	58	5	32-Φ54	3382	ZC800
1400	1500	1685	1590	1525	60	5	36-Φ54	3718	ZC1000

Z940

FP Z941 PN16、25、40、64、100、160 电动楔式闸阀 ELECTROMTOR WED GATEDE VALVE

Z942

■主要连接及外形尺寸 Main connection and external dimensions

(mm)

公称通径DN(mm) Nominal diameter	L	D	D_1	D_2	b	f	z-Φd	H	电动装置型号 Electric device model
	Z940 H Z941 Y Z942 -25		Z940W Z941Y -25P Z942H		Z940W Z941Y-25R Z942H		Z940 Z941Y Z942 -25I		
40	200	145	110	85	18	3	4-Φ18	595	ZB15
50	250	160	125	100	20	3	4-Φ18	653	ZB15
65	265	180	145	120	22	3	8-Φ18	665	ZB15
80	280	195	160	135	22	3	8-Φ18	725	ZB15
100	300	230	190	160	24	3	8-Φ23	787	ZB20
125	325	270	220	188	28	3	8-Φ25	902	ZB20
150	350	300	250	218	30	3	8-Φ25	955	ZB20
200	400	360	310	278	34	3	12-Φ25	1105	ZB40
250	425	425	370	332	36	3	12-Φ30	1343	ZB40
300	450	485	430	390	40	4	16-Φ30	1516	ZC60
350	550	550	490	448	44	4	16-Φ34	1678	ZC60
400	600	610	550	505	48	4	16-Φ34	1849	ZC90
450	650	660	600	555	50	4	20-Φ34	1937	ZC90
500	700	730	660	610	52	4	20-Φ41	2234	ZC120
600	800	840	770	718	56	5	20-Φ41	2432	ZC180
700	900	955	875	815	60	5	24-Φ48	2489	ZC250
800	1000	1070	990	930	64	5	24-Φ48	2643	ZC350

注：DN700、DN800的型号为Z942型

■主要连接及外形尺寸 Main connection and external dimensions

(mm)

公称通径DN(mm) Nominal diameter	L	D	D_1	D_2	D_6	b	z-Φd	f	f_2	H	电动装置型号 Electric device model
	Z940 H Z941 Y Z942 -40			Z940 W Z941 Y-40P Z942 H		Z940W Z941Y-40R Z942H		Z940H Z941Y Z942 -40I			
40	200	145	110	85	76	18	4-Φ18	3	4	617	ZB15
50	250	160	125	100	88	20	4-Φ18	3	4	665	ZB15
65	280	180	145	120	110	22	8-Φ18	3	4	680	ZB15
80	310	195	160	135	121	22	8-Φ18	3	4	752	ZB15
100	350	230	190	160	150	24	8-Φ23	3	4.5	846	ZB20
125	400	270	220	188	176	28	8-Φ25	3	4.5	908	ZB20
150	450	300	250	218	204	30	8-Φ25	3	4.5	1087	ZB40
200	550	375	320	282	260	38	12-Φ30	3	4.5	1243	ZB40
250	650	445	385	345	313	42	12-Φ34	3	4.5	1429	ZC45
300	750	510	450	408	364	46	16-Φ34	4	4.5	1608	ZC60
350	850	570	510	465	422	52	16-Φ34	4	5	1738	ZC90
400	950	655	585	535	474	58	16-Φ41	4	5	1897	ZC120
450	1050	680	610	560	524	60	20-Φ41	4	5	2104	ZC180
500	1150	755	670	612	576	62	20-Φ48	4	5	2401	ZC180

Z940

FP Z941 PN16、25、40、64、100、160 电动楔式闸阀 ELECTROMTOR WED GATEDE VALVE

Z942

■主要连接及外形尺寸 Main connection and external dimensions

(mm)

公称通径DN(mm) Nominaldiameter	L	D	D_1	D_2	D_6	b	z-Φd	f	f_2	H	电动装置型号 Electric device model
Z940H Z941Y Z942Y -64				Z940H Z941Y-64P Z942W		Z940H Z941Y-64R Z942W		Z940H Z941Y Z942Y -64I			
50	250	175	135	105	88	26	4-Φ23	3	4	667	ZB15
65	280	200	160	130	110	28	8-Φ23	3	4	685	ZB15
80	310	210	170	140	121	30	8-Φ23	3	4	748	ZB20
100	350	250	200	168	150	32	8-Φ25	3	4.5	845	ZB20
125	400	295	240	202	176	36	8-Φ30	3	4.5	920	ZB20
150	450	340	280	240	204	38	8-Φ34	3	4.5	1009	ZB40
200	550	405	345	300	260	44	12-Φ34	3	4.5	1253	ZC60
250	650	470	400	352	313	48	12-Φ41	3	4.5	1449	ZC60
300	750	530	460	412	361	54	16-Φ41	4	4.5	1867	ZC90
350	850	595	525	475	422	60	16-Φ41	4	5	1913	ZC120
400	950	670	585	525	474	66	16-Φ48	4	5	2017	ZC180
500	1150	800	705	640	576	70	20-Φ54	4	5	2459	ZC250
Z940H Z941Y Z942Y-100				Z940W Z941Y-100P Z942H		Z940W Z941Y-100R Z942H		Z940H Z941Y Z942Y -100I			
50	250	195	145	112	88	28	4-Φ25	3	4	781	ZB15
65	280	220	170	138	110	32	8-Φ25	3	4	830	ZB15
80	310	230	180	148	121	34	8-Φ25	3	4	865	ZB20
100	350	265	210	172	150	38	8-Φ30	3	4.5	1179	ZB40
125	400	310	250	210	176	42	8-Φ34	3	4.5	1198	ZC45
150	450	350	290	250	204	46	12-Φ34	3	4.5	1201	ZC60
200	550	430	360	312	260	54	12-Φ41	3	4.5	1611	ZC90
250	650	500	430	382	313	60	12-Φ41	3	4.5	1903	ZC90
300	750	585	500	442	364	70	16-Φ48	4	4.5	2054	ZC120
350	850	655	560	498	422	76	16-Φ54	4	5	2132	ZC180
400	950	715	620	558	474	80	16-Φ54	4	5	2321	ZC250
Z940H Z941Y Z942Y-160				Z940W Z941Y-160P Z942H		Z940W Z941Y-160R Z942H		Z940H Z941Y Z942Y -160I			
50	300	215	165	132	88	36	8-Φ25	3	4	905	ZB20
65	340	245	190	152	110	44	8-Φ30	3	4	968	ZB20
80	390	260	205	168	121	46	8-Φ30	3	4	978	ZB40
100	450	300	240	200	150	48	8-Φ34	3	4.5	1043	ZC45
125	525	355	285	238	176	60	8-Φ41	3	4.5	1248	ZC60
150	600	390	318	270	204	66	12-Φ41	3	4.5	1394	ZC90
200	750	480	400	345	260	78	12-Φ48	3	4.5	1621	ZC120

注：根据用户需要可提供气动和齿轮传动闸阀产品。

Z41为楔式钢性闸板，Z40为楔式弹性闸板，Z42为楔式双闸板。

Note:both pneumatic and gear drving gatw valves can be supplied perusers'requirement.

Z41 is the wedge rigid flashboard;Z40 is the wedge elastic flashboard,and Z42 is the wedge double flashboard.

*FPGL41型、FPYSTF型 Y型过滤器 Y TYPE FILTER

■结构特点及用途 Structures charcteristics and usage

Y型过滤器与管道中阀门及其它主要设备配套使用，也可单独使用于管路中。管道中介质首先进入过滤器，通过滤网再进入连接阀门及管道中，而杂物则留于过滤桶内。

Y型过滤器是有结构先进阻力小，冲洗方便等特点。Y型拉杆伸缩过滤器由Y型过滤器及伸缩接头组成，通常安装在阀门及其它主要设备之进口端，便于清理杂物与安装拆卸，以保护阀类或设备及正常使用。

Y-type filter can be used with valve in a pipeline or other main equipments and can also be individually used in apipeline. The medium in a pipeline goes in to the filter first, then into the connecting valve and pipeline through the filter screen, while foreign matters are left in the filter barrel.

It features an advanced structure, small resistance, easy to be rinsed etc., Y-type pull-rod stretching filter consists of Y-type filter and a stretching joint and is usually mounted on the inlet of a valve and other main equipments for the convenience to make up foreign matters, installation and removal and have valves or equipments normally work.

■主要技术参数 Main technique number

公称压力 Nominal pressure PN(MPa)	壳体试验压力 Shell test pressure (MPa)	工作压力 Working pressure (Mpa)	阀体材料 Body material	滤网材料 Sieve material	适用介质 Applicable medium
1.0	1.5	1.0	灰铸铁 Casting pig	不锈钢 Stainless steel	水Water 气Air 油品Oil
1.6	2.4	1.6	球墨铸铁 Ductile Iron 碳钢Carbon steel		
2.5	3.75	2.5	碳钢Carbon steel		





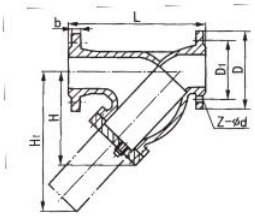

GL41型(Type)

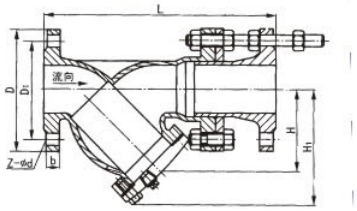

YSTF型(Type)

■主要外形及连接尺寸 Main external and connecting dimensions

公称通径 Nominal diameter DN(mm)	L		D			D₁			b			Z-Φd			H		H₁	
	SG41 GL41	YSTF	PN10	PN16	PN25	PN10	PN16	PN25	PN10	PN16	PN25	PN10	PN16	PN25	SG41 GL41	YSTF	SG41 GL41	YSTF
15	140		95	95	95	65	65	65	14	14	14	4-14	4-14	4-14	73		103	
20	150		105	105	105	75	75	75	16	16	16	4-14	4-14	4-14	88		127	
25	160		115	115	115	85	85	85	16	16	16	4-14	4-14	4-14	93		137	
32	180		135	135	140	100	100	100	18	18	18	4-18	4-18	4-18	100		148	
40	220		145	145	150	110	110	110	18	18	18	4-18	4-18	4-18	115		168	
50	240	310	160	160	165	125	125	125	20	20	20	4-18	4-18	4-18	155	155	195	195
65	250	380	180	180	185	145	145	145	20	20	22	4-18	4-18	8-18	198	198	270	270
80	320	420	195	195	200	160	160	160	22	22	24	8-18	8-18	8-18	210	210	295	295
100	380	460	215	215	235	180	180	190	24	24	24	8-18	8-18	8-22	250	250	344	344
125	440	540	245	245	270	210	210	220	26	26	26	8-18	8-18	8-26	305	305	422	422
150	550	610	285	285	300	240	240	250	26	26	28	8-22	8-22	8-26	358	358	485	485
200	600	750	340	340	360	295	295	310	28	30	30	8-22	12-22	12-26	450	450	602	602
250	600	795	395	405	425	350	355	370	28	32	32	12-22	12-26	12-30	503	503	710	710
300	630	860	445	460	485	400	410	430	28	32	34	12-22	12-26	16-30	578	578	815	815
350	780	1025	500	520	555	460	470	490	30	36	38	16-22	16-26	16-33	598	598	844	844
400	850	1150	565	580	620	515	525	550	32	38	40	16-26	16-30	16-36	618	618	872	872
500	850		670	715	730	620	650	660	34	42	44	20-26	20-33	20-36	693		978	
600	1000		780	840	845	725	770	770	36	48	46	20-30	20-36	20-39	765		1080	